3-way channel selector

Application demo circuit

R1/2/3 1K0 1/4 watt 5% carbon film
R4/5/6 4K7 1/4 watt 5% carbon film

C1 100nF ceramic
C2 10uF / 16 volt

S1/2/3 Push-to-make switch

IC1 PIC12F629
IC2 78L05
D1/2/3/4 IN4001
T1/2/3 BC548 or similar

RLY1/2/3 Relay (coil 12 volt 30-50mA operating current)

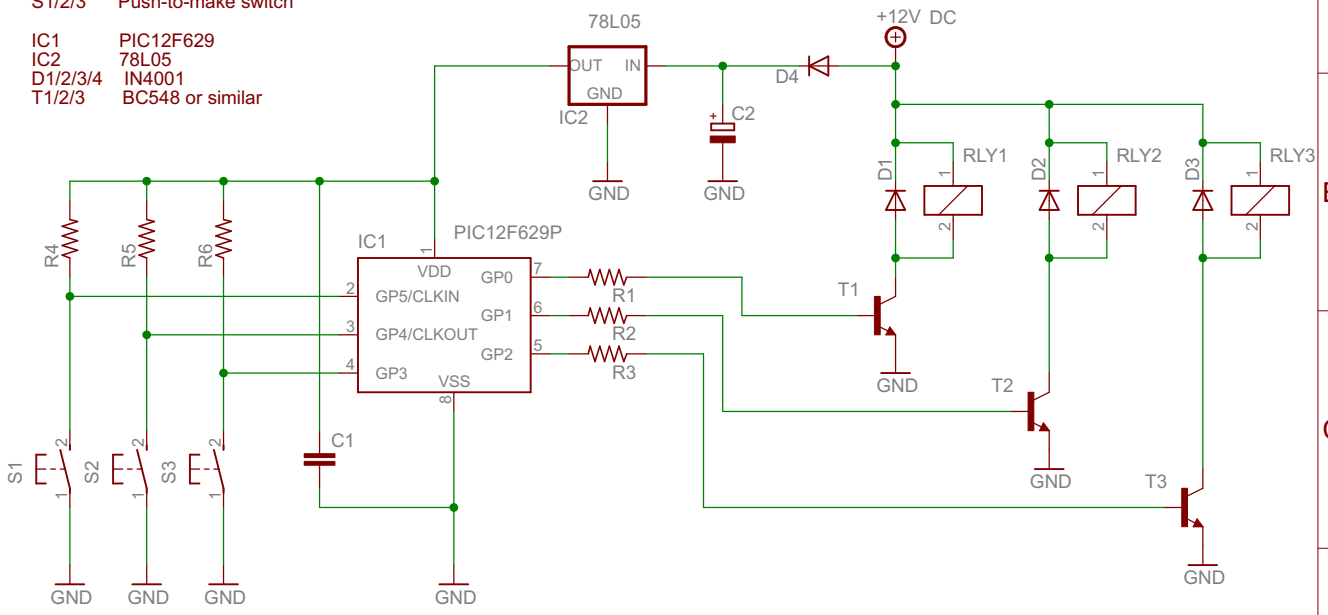

When switch is pressed, corresponding output is enabled and the two other outputs are turned off

Firmware features a programable overlap/deadband delay between turn on and previous output turn off
Configurable from 0 to 130mS in 0.512mS steps

Application demo circuit PIC12F629 requires programming with firmware	http://picprojects.org
	selectorswitchrly
	06/12/2011 12:19:05
	Sheet: 1/1